

IS09001 CE
VPC PNEUMATIC®

Air Source Treatment Unit Tips

VPC always controls very strictly all the details, from mould-making to die-casting technique, from high precision maching to orderly assembling, from intelligent test control to quality control. . . . . .

How to Use and Maintain

1. Before use, check the unit to see if there is some damage during the transportation, or if the joint connection is loose. If everything be ok, then start to use
2. When installing, please pay attention to the direction of airflow and keep the unit upright.
3. When the inlet and outlet are in reduced connection, the airflow rate will be reduced approx by 10%. If with higher rate of precision, the airflow rate will be reduced approx by 7%.
4. For units with bowl guards, make sure to fixed them before use.
5. When use the regulator or filter and regulator. Firstly, we need to adjust the hand wheel to the zero position. Fix the pressure gauge and plugs on the right positions and ensure they will not leakage.
   (Positions of the pressure gauge and plug can be exchanged)
   Then compressed air in and adjust the air to a proper pressure.
6. When using the lubricator, we need to adjust the oil valve needle to the zero position and add oil to the oil level line first. Then adjust to a proper postion when compressed air in. Pay attention to the brand and grade of the lubricating oil.
   Never use spindle oil and lubricating oil containing lower ketone or aromatic hydrocarbon.
7. When using metal tubes for connection, remember to remove the metal grains, dusts and oil stains in the tubes.
8. Please attention whether the working condition meet the technical details of the units. (Such as the working pressure, working temperature)
9. Please change the filter element when filter's function not goes well.
10. When remove the units from the system,
    Please pay attention to protect the nuits by the dust plug on the threads.

How to Order

1.Please let us know the item No,order number,specifications and quantity when placing an order.
2.For orders of filter,regulator and regulator+filter ets.,please specify the filter precision and pressure range.Otherwise,we will provide the our normal standard products to you.
3.For special requirements,you can contact us by e-mail,fax and so on,We can discuss together and arrange specially.

O Series Air Treatment Units

Ordering Code OU Series FR.L Combination

O U - 1/4 - □ - □ - MINI - □

- Port Size: G1/8″ G1/4″ G3/8″ G1/2″ G3/4″ G1″
- Precision: Blank: 25μm; 5M: 5μm
- Pressure Gauge: Blank: 12bar; 7: 7bar
- MINI: Body width 40mm; MIDI: Body width 55mm; MAXI: Body width 66mm
- Condensate Drain: Blank: Turned Manually; A: Fully automatic

Filter+Regulator+Lubricator



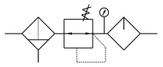

Specifications

Specifications		MINI			MIDI			MAXI	
Port Size		G1/8″	G1/4″	G3/8″	G3/8″	G1/2″	G3/4″	G3/4″	G1″
Materials Information		Housing: Zinc die-casting; Filter bowl and oil: PC; Metal bowl guard: Aluminium alloy; Sealing: NBR; Adjusting knob: POM							
Working Medium		Compressed air							
Mounting Type		Pipe mounting or Leg mounting							
Assembly Position		Vertical ±5°							
Min.Standard Nominal Flow Rate		3L/min			6L/min			10L/min	
Capacity of Condensate Fluid		22ml			43ml			80ml	
Primary Pressure	Turned Manually	0.1~1.6MPa							
	Fully automatic	0.15~1.2MPa							
Working Pressure		0.05~1.2MPa/0.05~0.7MPa							
Precision		40μm/5μm							
Working Temperature Range		0~60℃							

Standard Rated Flow

Joint Size		G1/8″	G1/4″	G3/8″	G3/8″	G1/2″	G3/4″	G3/4″	G1″
MINI	OU-...(-A)	700	1000	1200	–	–	–	–	–
	OU-...-5M-...(-A)	800	1300	1500	–	–	–	–	–
	OU-...-7-(-A)	600	850	1050	–	–	–	–	–
MIDI	OU-...(-A)	–	–	–	2000	2600	2600	–	–
	OU-...-5M-...(-A)	–	–	–	2000	2800	2800	–	–
	OU-...-7-(-A)	–	–	–	1700	1800	2100	–	–
MAXI	OU-...(-A)	–	–	–	–	–	–	3800	4800
	OU-...-5M-...(-A)	–	–	–	–	–	–	5000	5200
	OU-...-7-(-A)	–	–	–	–	–	–	3600	3800

IS09001 CE
VPC PNEUMATIC®
O Series Air Treatment Units

Internal Structure

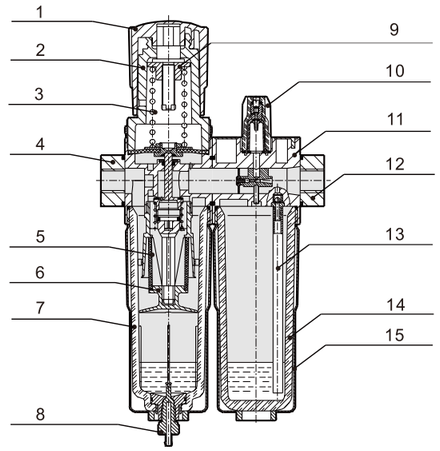

NO.	Item	Material
1	Pressure knob	POM
2	Regulator cap	POM
3	Pressure spring	SWC
4	Flange-IN	Zinc alloy
5	Filter element	Brass
6	Manger	POM
7	Metal bowl guard	Aluminium alloy
8	Condensate drain	POM
9	Adjusting spindle	S35C
10	Upper glass	PC
11	OL body	Zinc alloy
12	Flange-OUT	Zinc alloy
13	Oil tube	PU
14	Lubricator bowl	PC
15	Metal bowl guard	Aluminium alloy
	O-Ring	NBR

Main Dimensions

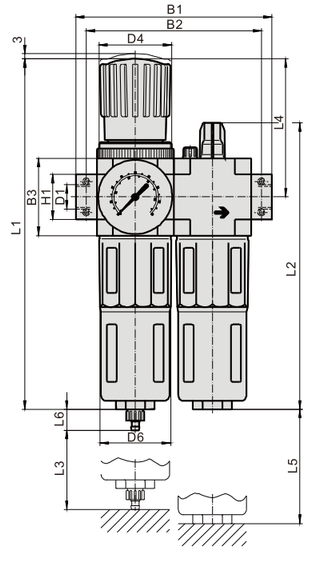

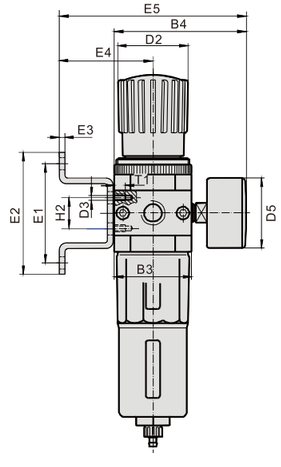

Turned Manually

Fully automatic

Model	B1	B2	B3	B4	D1	D2	D3	D4	D5	D6	L1	L2	L3	L4	L5	L6	L7	H1	H2	E1	E2	E3	E4	E5
OU-MINI-1/8″	104	92	40	76	G1/8"	40	M4	M36*1.5	Φ40	Φ38	193	169	60	69	100	15	19	20	11	35	44	2	39	95
OU-MINI-1/4″	104	92	40	76	G1/4"	40	M4	M36*1.5	Φ40	Φ38	193	169	60	69	100	15	19	20	11	35	44	2	39	95
OU-MINI-3/8″	104	92	40	76	G3/8"	40	M4	M36*1.5	Φ40	Φ38	193	169	60	69	100	15	19	20	11	35	44	2	39	95
OU-MIDI-3/8″	140	125	55	93	G1/8"	55	M5	M52*1.5	Φ52	Φ52	250	206	80	97	120	15	19	32	22	60	71	3	47	112
OU-MIDI-1/2″	140	125	55	93	G1/2"	55	M5	M52*1.5	Φ52	Φ52	250	206	80	97	120	15	19	32	22	60	71	3	47	112
OU-MIDI-3/4″	140	125	55	93	G3/4"	55	M5	M52*1.5	Φ52	Φ52	250	206	80	97	120	15	19	32	22	60	71	3	47	112
OU-MIXI-3/4″	162	146	66	104	G3/4"	66	M5	M36*1.5	Φ63	Φ65	252	223	90	80	150	15	19	32	22	60	71	3	52	123
OU-MIXI-1″	182	157	66	104	G1	66	M5	M36*1.5	Φ63	Φ65	252	223	90	80	150	15	19	40	22	60	71	3	52	123

O Series Air Treatment Units

Ordering Code OFR Series F.R Combination

O FR - 1/4 - □ - □ - MINI - □

- 1/4 — Port Size: G1/8″ G1/4″ G3/8″ G1/2″ G3/4″ G1″
- FR — Filter+Regulator
- □ — Precision: Blank: 40μm; 5M: 5μm
- □ — Pressure Gauge: Blank: 0.5-12bar; 7: 0.5-7bar
- MINI — MINI: Body width 40mm; MIDI: Body width 55mm; MAXI: Body width 66mm
- □ — Condensate Drain: Blank: Turned Manually; A: Fully automatic



Specifications

Specifications		MINI			MIDI			MAXI	
Port Size		G1/8″	G1/4″	G3/8″	G3/8″	G1/2″	G3/4″	G3/4″	G1″
Materials Information		Housing: Zinc die-casting; Filter bowl and oil: PC; Metal bowl guard: Aluminium alloy; Sealing: NBR; Adjusting knob: POM							
Working Medium		Compressed air							
Mounting Type		Pipe mounting or foot mounting							
Assembly Position		Vertical ±5°							
Features of Structure		Sintered filter with water separator; MINI/MIDI: Diaphragm type regulator; MAXI: Piston regulator; Direct constant-density lubricator。							
Primary Pressure	Turned Manually	0.1~1.6MPa							
	Fully automatic	0.15~1.2MPa							
Working Pressure		0.05~1.2MPa/0.05~0.7MPa							
Working Temperature Range		0~60℃							
Precision		40μm/5μm							
Capacity of Condensate Fluid		22ml			43ml			80ml	

Standard Rated Flow

Joint Size		G1/8″	G1/4″	G3/8″	G3/8″	G1/2″	G3/4″	G3/4″	G1″
MINI	OFR-...-D-	750	1400	1600	–	–	–	–	–
	OFR-...-D-7-...	900	1500	1700	–	–	–	–	–
	OFR-...-D-5M-...	650	120	1350	–	–	–	–	–
MIDI	OFR-...-D-	–	–	–	3100	3400	3400	–	–
	OFR-...-D-7-...	–	–	–	3200	3900	4000	–	–
	OFR-...-D-5M-...	–	–	–	2400	2600	2600	–	–
MAXI	OFR-...-D-	–	–	–	–	–	–	9700	10000
	OFR-...-D-7-...	–	–	–	–	–	–	10000	11000
	OFR-...-D-5M-...	–	–	–	–	–	–	7600	8000

IS09001 CE
VPC PNEUMATIC®
O Series Air Treatment Units

Internal Structure

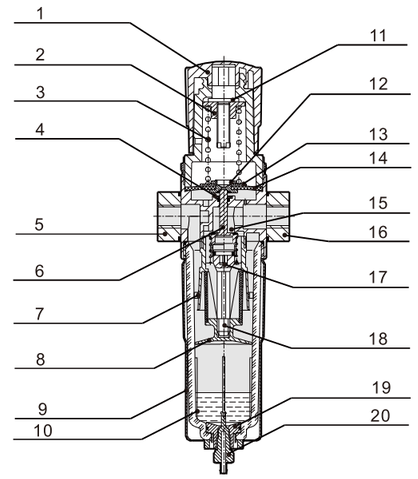

NO.	Item	Material
1	Pressure knob	POM
2	Regulator nut	S35C
3	Pressure spring	SWC
4	One part of membrane	PA6+G15
5	Flange-IN	Zinc alloy
6	Spool	Brass
7	Filter element	PE
8	Manger	POM
9	Metal bowl guard	Aluminium alloy
10	Filter bowl	PC
11	Wearing sheet	Insulation sheet
12	Sheet	NBR
13	One part of diaphragm	SPCC
14	Diaphragm	NBR+Nylon
15	OR Body	Zinc alloy
16	Flange-OUT	Zinc alloy
17	Fasteners	Brass
18	Filter element base	POM
19	Inner joint	POM
20	Condensate drain	POM
	O-ring	NBR

Main Dimensions

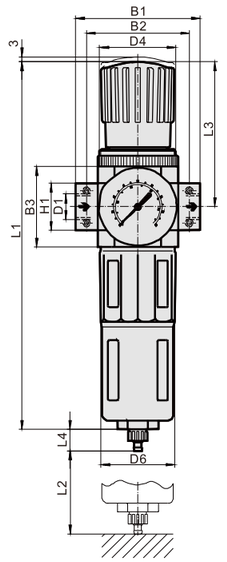

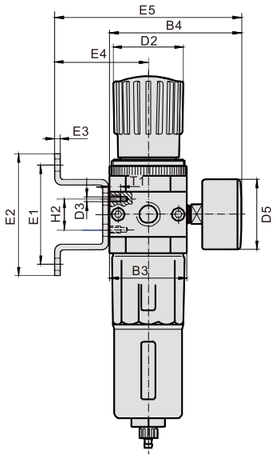

Turned Manually

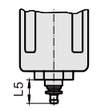

Fully automatic

Model	B1	B2	B3	B4	D1	D2	D3	D4	D5	D6	L1	L2	L3	L4	L5	H1	H2	E1	E2	E3	E4	E5
OFR-MINI-1/8″	64	52	40	76	G1/8"	Φ31	M4	M36*1.5	Φ40	Φ38	193	60	69	15	19	20	11	35	44	2	39	95
OFR-MINI-1/4″	64	52	40	76	G1/4"	Φ31	M4	M36*1.5	Φ40	Φ38	193	60	69	15	19	20	11	35	44	2	39	95
OFR-MINI-3/8″	64	52	40	76	G3/8"	Φ31	M4	M36*1.5	Φ40	Φ38	193	60	69	15	19	20	11	35	44	2	39	95
OFR-MIDI-3/8″	85	70	55	93	G1/8"	Φ50	M5	M52*1.5	Φ52	Φ52	250	80	97	15	19	32	22	60	71	3	47	112
OFR-MIDI-1/2″	85	70	55	93	G1/2"	Φ50	M5	M52*1.5	Φ52	Φ52	250	80	97	15	19	32	22	60	71	3	47	112
OFR-MIDI-3/4″	85	70	55	93	G3/4"	Φ50	M5	M52*1.5	Φ52	Φ52	250	80	97	15	19	32	22	60	71	3	47	112
OFR-MIXI-3/4″	96	80	66	104	G3/4"	Φ31	M5	M36*1.5	Φ63	Φ65	252	90	80	15	19	32	22	60	71	3	52	123
OFR-MIXI-1″	116	91	66	104	G1	Φ31	M5	M36*1.5	Φ63	Φ65	252	90	80	15	19	40	22	60	71	3	52	123

IS09001 CE
VPC PNEUMATIC®

O Series Air Treatment Units

Ordering Code OF Series Filter

O F - 1/4 - □ - MINI - □

- Filter
- Port Size: G1/8″ G1/4″ G3/8″ G1/2″ G3/4″ G1″
- MINI: Body width 40mm; MIDI: Body width 55mm; MAXI: Body width 66mm
- Precision: Blank: 40μm; 5M: 5μm
- Condensate Drain: Blank: Turned manually; A: Fully automatic



Specifications

Specifications		MINI			MIDI			MAXI	
Port Size		G1/8″	G1/4″	G3/8″	G3/8″	G1/2″	G3/4″	G3/4″	G1″
Working Medium		Clean air							
Precision		40μm/5μm							
Materials Information		Housing: Zinc die-casting; Filter bowl and oil: PC; Metal bowl guard: Aluminium alloy; Sealing: NBR; Adjusting knob: POM							
Medium Temperature		0~60℃							
Ambient Temperature		0~60℃							
Mounting Type		Pipe mounting or foot mounting							
Assembly Position		Vertical ±5°							
Features of Structure		Sintered filter with water separator							
Max.Condensate Capacity		22ml			43ml			80ml	
Primary Pressure	Turned manually	0-1.6Mpa							
	Fully automatic	0.15-1.2Mpa							
Weight		250g			700g			1340g	1440g

Standard Rated Flow

Joint Size		G1/8″	G1/4″	G3/8″	G3/8″	G1/2″	G3/4″	G3/4″	G1″
MINI	OF-...(-A)	1000	1200	1400	–	–	–	–	–
	OF-...-5M-...(-A)	800	950	1100	–	–	–	–	–
MIDI	OF-...(-A)	–	–	–	2700	3000	3000	–	–
	OF-...-5M-...(-A)	–	–	–	1800	2000	2000	–	–
MAXI	OF-...(-A)	–	–	–	–	–	–	5000	5300
	OF-...-5M-...(-A)	–	–	–	–	–	–	3600	3800

Note: The minimum flow required for normal operation is 5L/min

O Series Air Treatment Units

Internal Structure

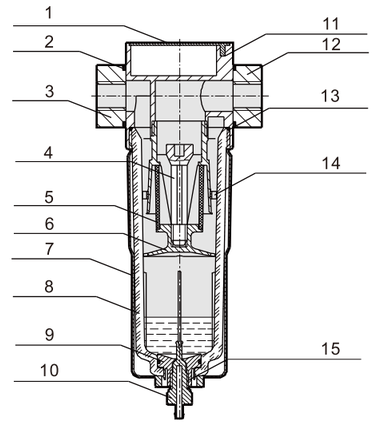

NO.	Item	Material
1	Ornament cover	POM
2	O-ring	NBR
3	Flange-IN	Zinc alloy
4	Filter element base	POM
5	Filter element	PE
6	Manger	POM
7	Metal bowl guard	Aluminium alloy
8	Filter bowl	PC
9	O-ring	NBR
10	Condensate drain	POM
11	OF Body	Zinc alloy
12	Flange-OUT	Zinc alloy
13	O-ring	NBR
14	Whirlwind impeller	POM
15	Inner joint	POM

Main Dimensions

With connecting plate

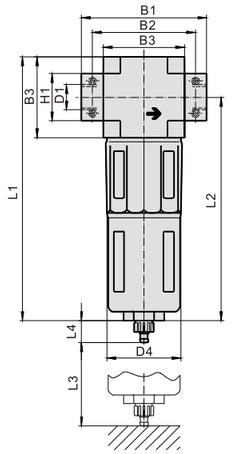

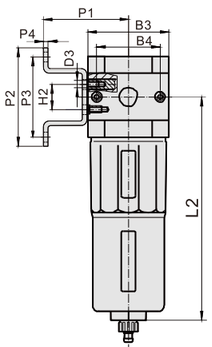

Without connecting plate

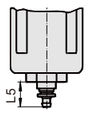

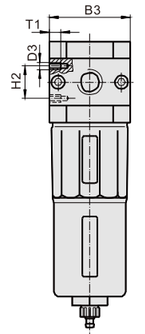

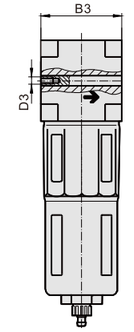

Model	B1	B2	B3	B4	D1	D3	D4	H1	H2	L1	L2	L3	L4	L5	P1	P2	P3	P4	T1
OF-MINI-1/8″	64	52	40	30	G1/8	M4	38	20	11	144	124	60	15	19	39	43	35	2	7
OF-MINI-1/4″	64	52	40	30	G1/4	M4	38	20	11	144	124	60	15	19	39	43	35	2	7
OF-MINI-3/8″	70	52	40	30	G3/8	M4	38	20	11	144	124	60	15	19	39	43	35	2	7
OF-MIDI-3/8″	85	70	55	43	G3/8	M5	52	32	22	179	151	80	15	19	47	70	60	3	8
OF-MIDI-1/2″	85	70	55	43	G1/2	M5	52	32	22	179	151	80	15	19	47	70	60	3	8
OF-MIDI-3/4″	85	70	55	43	G3/4	M5	52	32	22	179	151	80	15	19	47	70	60	3	8
OF-MAXI-3/4″	96	80	66	46	G3/4	M5	65	32	22	203	170	90	15	19	53	70	60	3	8
OF-MAXI-1″	116	91	66	46	G1	M5	65	40	22	203	170	90	15	19	53	70	60	3	8

IS09001 CE
VPC PNEUMATIC®

O Series Air Treatment Units

Ordering Code OL Series Lubricator

O L - 1/4 - MINI

- O L: Lubricator
- 1/4: Port Size — G1/8″, G1/4″, G3/8″, G1/2″, G3/4″, G1″
- MINI: Body width 40mm; MIDI: Body width 55mm; MAXI: Body width 66mm



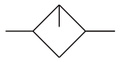

Specifications

Specifications	MINI			MIDI			MAXI	
Port Size	G1/8″	G1/4″	G3/8″	G3/8″	G1/2″	G3/4″	G3/4″	G1″
Working Medium	Clean air							
Max.Working Pressure	1.6MPa							
Min.Standard Nominal Flow Rate	3L/min			6L/min			10L/min	
Max.Condensate Capacity	22ml			43ml			80ml	
Max.Capacity of Oil cup	45ml			110ml			190ml	
Mounting Type	Pipe mounting or Leg mounting							
Medium Temperature	-10~60℃							
Ambient Temperature	-10~60℃							
Assembly Position	Vertical ±5°							
Materials	Housing: Zinc die-casting; Filter bowl and oil: PC; Metal bowl guard: Aluminium alloy; Sealing: NBR; Adjusting knob: POM							
Recommended oil	Turbine No1 Oil ISOVG32							
Features of Structure	The direct constant-density lubricator							
Weight	270g			630g			1100g	1200g

Standard Rated Flow

Joint Size	G1/8″	G1/4″	G3/8″	G3/8″	G1/2″	G3/4″	G3/4″	G1″
MINI	1300	2300	2700	–	–	–	–	–
MIDI	–	–	–	5500	6100	6300	–	–
MAXI	–	–	–	–	–	–	8400	9000

O Series Air Treatment Units

Internal Structure

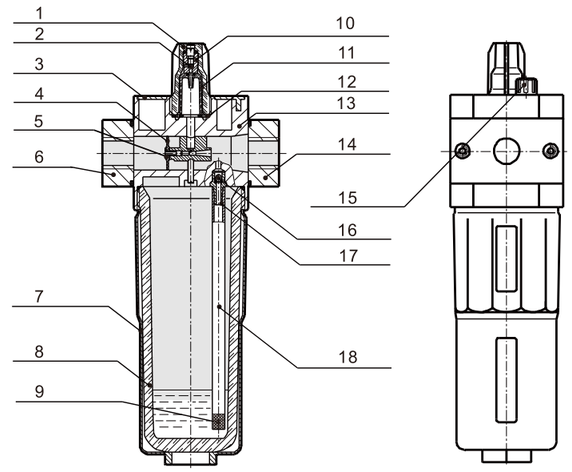

NO.	Item	Material
1	Upper glass	PC
2	Adjust screw	Brass
3	Ornament cover	PO
4	Windshield chip	NBR
5	Windshield base	Brass
6	Flange-IN	Zinc alloy
7	Metal bowl guard	Aluminium
8	Lubricator bowl	PC
9	Oil-filter plug	Brass powder sintered
10	Screw base	Brass
11	Oil dropping	PC
12	Seal piece	NBR
13	OL Body	Zinc alloy
14	Flange-OUT	Zinc alloy
15	Bleeder screw	POM
16	Steel ball	SUS304
17	Connection	POM
18	Oil tube	PU
–	O-ring	NBR

Main Dimensions

With connecting plate

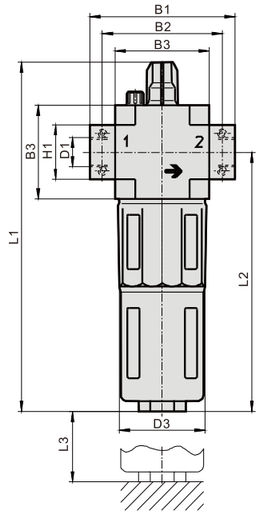

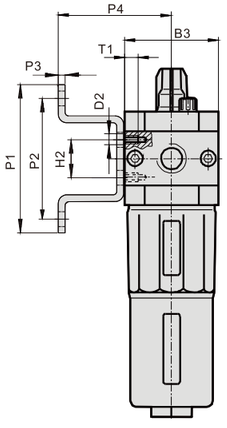

Without connecting plate

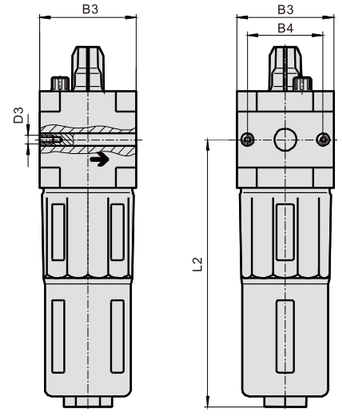

Model	B1	B2	B3	B4	D1	D2	D3	H1	H2	L1	L2	L3	P1	P2	P3	P4	T1
OL-MINI-1/8″	64	52	40	30	G1/8	M4	Φ38	20	11	169	124	100	44	35	2	39	7
OL-MINI-1/4″	64	52	40	30	G1/4	M4	Φ38	20	11	169	124	100	44	35	2	39	7
OL-MINI-3/8″	70	52	40	30	G3/8	M4	Φ38	20	11	169	124	100	44	35	2	39	7
OL-MIDI-3/8″	85	70	55	43	G3/8	M5	Φ52	32	22	204	151	120	71	60	3	47	8
OL-MIDI-1/2″	85	70	55	43	G1/2	M5	Φ52	32	22	204	151	120	71	60	3	47	8
OL-MIDI-3/4″	85	70	55	43	G3/4	M5	Φ52	32	22	204	151	120	71	60	3	47	8
OL-MAXI-3/4″	96	80	66	46	G3/4	M5	Φ65	32	22	228	170	150	71	60	3	53	8
OL-MAXI-1″	116	91	66	46	G1	M5	Φ65	40	22	228	170	150	71	60	3	53	8

IV

O Series Air Treatment Units

Ordering Code OR Series Regulator

O R - 1/4 - □ - MINI

- Regulator
- Port Size: G1/8″ G1/4″ G3/8″ G1/2″ G3/4″ G1″
- Pressure Gauge: Blank: 0.5-12bar; 7: 0.5-7bar
- MINI: Body width 40mm; MIDI: Body width 55mm; MAXI: Body width 66mm



Specifications

Specifications		MINI			MIDI			MAXI	
Port Size		G1/8″	G1/4″	G3/8″	G3/8″	G1/2″	G3/4″	G3/4″	G1″
Working Medium		Compressed air							
Features of Structure		Sintered filter with water separator;MINI/MIDI:Diaphragm type regulator; MAXI:Piston regulator;Direct constant-density lubricator							
Mounting Type		Pipe mounting or foot mounting							
Assembly Position		Any							
Primary Pressure		0.1~1.6MPa							
Working Pressure		0.05~1.2MPa/0.05~0.7MPa							
Working Temperature Range		0~60℃							
Materials Information		Housing:Zinc die-casting;Filter bowl and oil;Polycarbonate; Metal bowl guard:Aluminium alloy;Sealing:NBR; Adjusting knob:POM							
Adjustment Range		0.05~0.7MPa							
		0.05~1.2MPa							
Weight	With pressure gauge	350g			720g			1200g	
	Without pressure gauge	300g			660g			1100g	

Standard Rated Flow

Joint Size		G1/8″	G1/4″	G3/8″	G3/8″	G1/2″	G3/4″	G3/4″	G1″
MINI	OR-...(0.05~0.7MPa)	1000	1600	1800	–	–	–	–	–
	OR-...(0.05~1.2MPa)	800	1500	1700	–	–	–	–	–
MIDI	OR-...(0.05~0.7MPa)	–	–	–	3300	4000	4500	–	–
	OR-...(0.05~1.2MPa)	–	–	–	3200	3500	3500	–	–
MAXI	OR-...(0.05~0.7MPa)	–	–	–	–	–	–	12000	12500
	OR-...(0.05~1.2MPa)	–	–	–	–	–	–	11000	11500

IS09001 CE
VPC PNEUMATIC®
O Series Air Treatment Units

Internal Structure

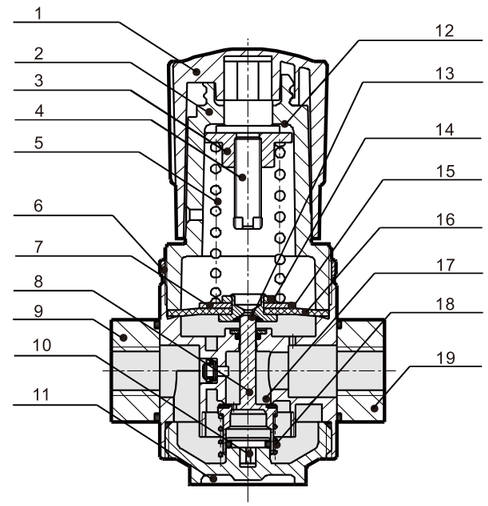

NO.	Item	Material
1	Pressure knob	POM
2	Regulator cap	POM
3	Regulator nut	S35C
4	Adjusting spindle	S35C
5	Pressure spring	SWC
6	Fixed ring	6061-T6
7	One part of membrane	PA6+G15
8	Flange-IN	Zinc alloy
9	Spool	Brass
10	Fasteners	Brass
11	Locker cover	Zinc alloy
12	Wearing sheet	Insulation sheet
13	Sheet	NBR
14	Overflow base	6061-T6
15	One part of diaphragm	SPCC
16	Diaphragm	NBR+Nylon
17	OR Body	Zinc alloy
18	Flange-OUT	Zinc alloy
19	Spring	SWPB
	O-ring	NBR

Main Dimensions

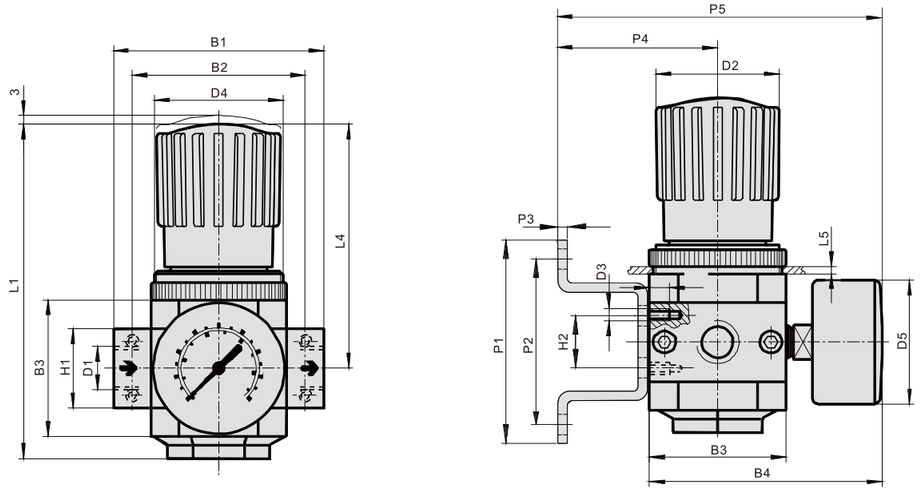

Model	B1	B2	B3	B4	D1	D2	D3	D4	D5	H1	H2	L1	L4	L5	L6	L7	T1	P1	P2	P3	P4	P5
OR-MINI-1/8″	64	52	40	76	G1/8	31	M4	M36*1.5	Φ41	20	11	96	68	3	98	60	7	43	35	2	39	95
OR-MINI-1/4″	64	52	40	76	G1/4	31	M4	M36*1.5	Φ41	20	11	96	68	3	98	60	7	43	35	2	39	95
OR-MINI-3/8″	70	52	40	76	G3/8	31	M4	M36*1.5	Φ41	20	11	96	68	3	98	60	7	43	35	2	39	95
OR-MIDI-3/8″	85	70	55	95	G3/8	50	M5	M52*1.5	Φ50	32	22	135	99	5	130	60	8	70	60	3	47	112
OR-MIDI-1/2″	85	70	55	95	G1/2	50	M5	M52*1.5	Φ50	32	22	135	99	5	130	60	8	70	60	3	47	112
OR-MIDI-3/4″	85	70	55	95	G3/4	50	M5	M52*1.5	Φ50	32	22	135	99	5	130	60	8	70	60	3	47	112
OR-MAXI-3/4″	96	80	66	107	G3/4	31	M5	M36*1.5	Φ50	32	22	125	82	4	111	60	8	70	60	3	53	124
OR-MAXI-1″	116	91	66	107	G1	31	M5	M36*1.5	Φ50	40	22	125	82	4	111	60	8	70	60	3	53	124

O Series Air Treatment Units

Ordering Code ORB Series Pressure Regulator Combinations

ORB-1/4 - □ - □ - □ MINI

- Port Size: G1/8″, G1/4″, G3/8″, G1/2″, G3/4″, G1″
- Pressure Range: Blank: 0.5-12bar; 7: 0.5-7bar
- Pressure gauge: Blank: With pressure gauge; 0: Without pressure gauge
- Functions: K2: Manifold with 2 pressure regulators; K3: Manifold with 3 pressure regulators; K4: Manifold with 4 pressure regulators; K5: Manifold with 5 pressure regulators
- MINI: Body width 40mm; MIDI: Body width 55mm; MAXI: Body width 66mm

Pressure Regulator Combinations

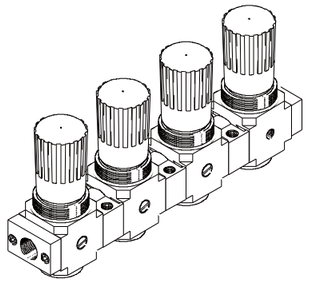

Specifications

Specifications		MINI	MIDI
Working Medium		Compressed air	
Type of Mounting		Via accessory	
Assembly Position		Arbitrary position	
Pressure Regulation Range		0.05~0.7MPa	
		0.05~1.2MPa	
Standard Rated Flow	0.05~0.7MPa	1800L/min	3800L/min
	0.05~1.2MPa	1600L/min	3200L/min
Working Temperature Range		0~60℃	

Main Dimensions

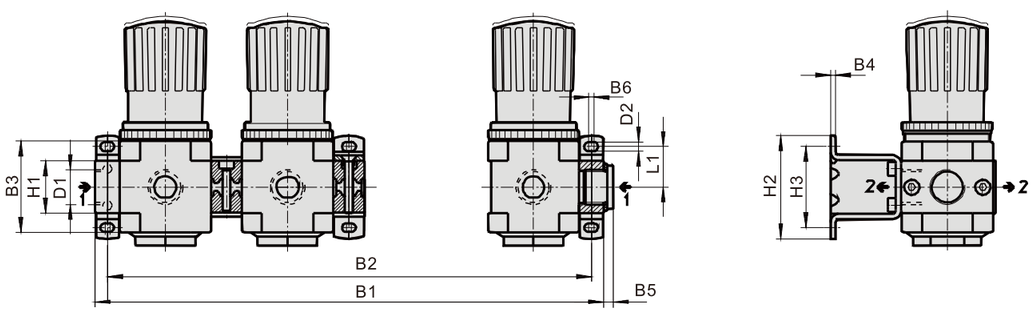

Model		B1				B2				B3	B4	B5	B6	D1	D2	H1	H2	H3	L1
		K2	K3	K4	K5	K2	K3	K4	K5										
MINI	ORB-1/4″	119	174	229	284	107	162	217	272	40	2	59	7.3	G1/4	4.3	20	47.3	35	17.5
	ORB-3/8″	125	180	235	290	107	162	217	272	40	2	59	7.3	G3/8	4.3	20	47.3	35	17.5
MIDI	ORB-3/8″	159	233	307	381	144	218	292	366	55	3	70.5	8.3	G3/8	5.3	32	62.3	49	31.2
	ORB-1/2″	159	233	307	381	144	218	292	366	55	3	70.5	8.3	G1/2	5.3	32	62.3	49	31.2

IS09001 CE
VPC PNEUMATIC®

O Series Accessories

Mounting bracket OHC



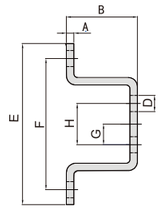

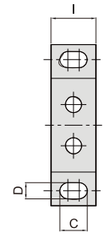

Model	A	B	C	D	E	F	G	H	I	Type
MINI	2	19	7.3	4.3	43	35	5.5	11	12	OHC-MINI
MIDI	3	19	8.3	5.3	43	35	16.5	22	14	OHC-MIDI
MAXI	3	19	8.3	5.3	70	60	16.5	22	14	OHC-MAXI

Mounting bracket OHO

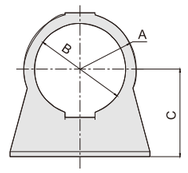

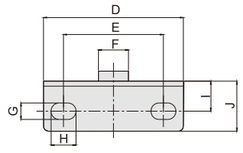

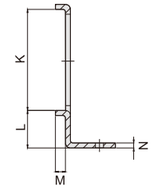

Model	A	B	C	D	E	F	G	H	I	J	K	L	M	N	Type
MINI	22.5	36.5	35	56	40	12	6.5	10	12	20	40.4	15	4	2	OHO-MINI
MIDI	30	52.5	48	70	35	12	8.5	10.5	17.5	27	55.5	20	4	2	OHO-MIDI
MAXI	22.5	36.5	35	56	40	12	6.5	10	12	20	40.4	15	4	2	OHO-MAXI

Branching modules FRM

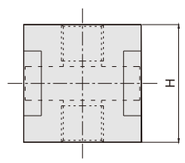

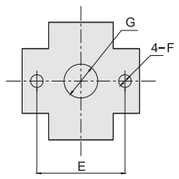

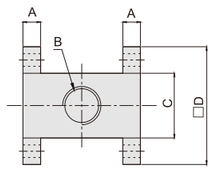

Model	A	B	C	D	E	F	G	H	Type
MINI	6	G1/8, G1/4, G3/8	22	40	30	4.3	11.5	40	FRM-...-MINI
MIDI	8	G3/8, G1/2, G3/4	32	55	43	5.5	16	55	FRM-...-MIDI

Nut HMR



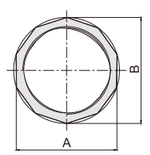

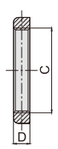

Model	A	ΦB	C	D	Type
MINI	44	45	M36*1.5	7	HMR-MINI
MIDI	60	62	M52*1.5	8	HMR-MIDI
MAXI	44	45	M36*1.5	7	HMR-MAXI

Pressure Gauge OMA



Model	Normal size	Pneumatic connection	Indicating range
OMA-40-10-1/8	40	G1/8	0-10bar
OMA-40-16-1/8			0-16bar
OMA-50-10-1/4	50	G1/4	0-10bar
OMA-50-16-1/4			0-16bar

A Series Air Treatment Units

Ordering Code F.R.L Combination

AC 30 00 - 03 - □

- 30: 10:1000 Body Size; 20:2000 Body Size; 30:3000 Body Size; 40:4000 Body Size; 50:5000 Body Size
- 00: Three Elements (Filter+Regulator+Lubricator)
- 03: M5:M5; 01:1/8″; 02:1/4″; 03:3/8″; 04:1/2″; 06:3/4″; 10:1″
- □: Blank: Manual Drain Type; D: Auto Drain Type (Available only For 2000 or Above)

Filter+Regulator+Lubricator





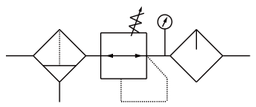

Specifications

Guaranteed pressure resistance	1.5MPa
Max. working pressure	1.0MPa
Working temperature	5~60℃
Filter precision	25 μm(5 μm is optional)
Recommended oil	Turbine No1 Oil ISOVG32
Bowl material	Polycarbonate
Bowl guard	AC1000~2000 (None) AC2500~5000 (Available)
Pressure adjusting range	AC1000: 0.05~0.7MPa Ac2000~5000: 0.05~0.85MPa
Valve type	With overflow

Note: NPT, PT Port size is optional

Model	Specifications							Accessories
	Assembly			Rated flow (L/min)	Port size (G)	Pressure gauge thread size(G)	Weight (Kg)	Bracket (2Pcs)
	Filter	Regulator	Lubricator					
AC1000-M5	AF1000	AR1000	AL1000	90	M5	1/16	0.26	Y10L
AC2000-01	AF2000	AR2000	AL2000	500	G1/8"	1/8	0. 74	Y20L
AC2000-02					G1/4"			
AC2500-02	AF3000	AR2500	AL3000	1500	G1/4"	1/8	1.04	Y30L
AC2500-03					G3/8"			
AC3000-02	AF3000	AR3000	AL3000	2000	G1/4"	1/8	1.18	Y30L
AC3000-03					G3/8"			
AC4000-03	AF4000	AR4000	AL4000	4000	G3/8"	1/4	2.14	Y40L
AC4000-04					G1/2"			
AC4000-06	AF4000-06	AR4000-06	AL4000-06	4500	G3/4"	1/4	2.47	Y50L
AC5000-06	AF5000	AR5000	AL5000	5000	G3/4"	1/4	3.82	Y60L
AC5000-10					G1"			

Note: The above information is based on 0.7Mpa(7.1kgf/cm^2) supply pressure and 0.5Mpa(5.1kgf/cm^2) setted pressure

IS09001 CE
VPC PNEUMATIC®
A Series Air Treatment Units

Main Dimensions

AC1000-2000

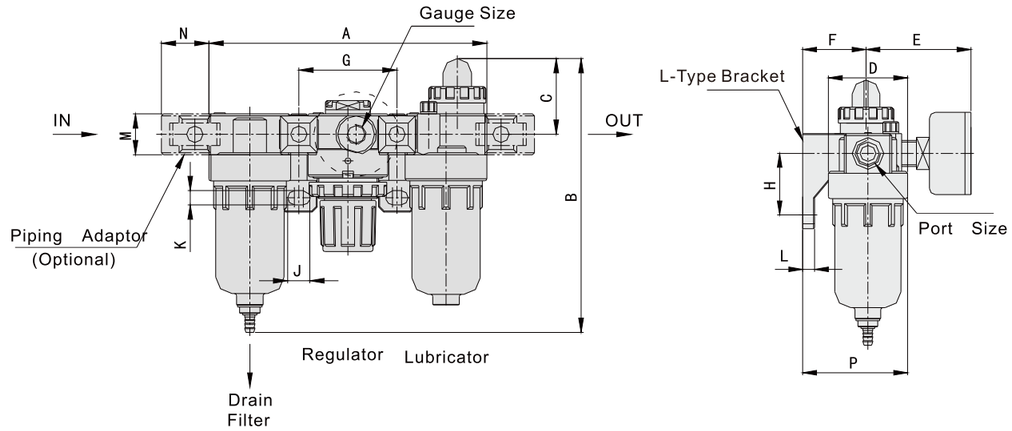

AC2500-5000

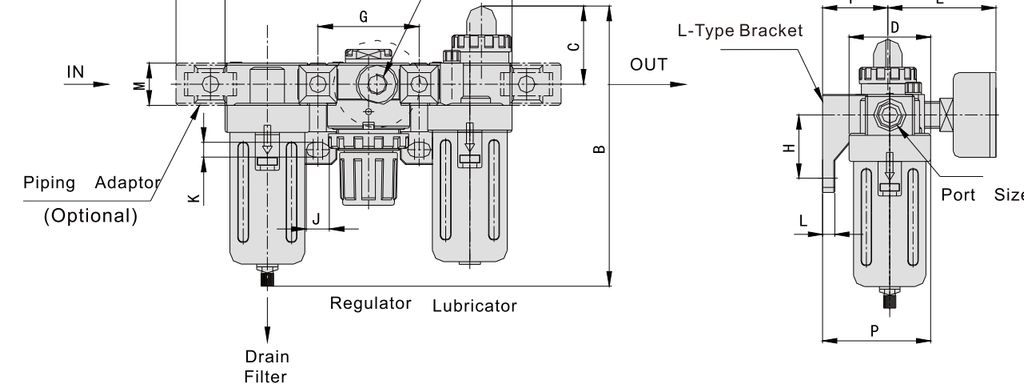

Model	Port Size	A	B	C	D	E	F	G	H	J	K	L	M	N	P
AC1000	M5	91	84.5	25.5	25	26	25	33	20	4.5	7.5	5	17.5	16	38.5
AC2000	1/8~1/4	140	125	38	40	56.8	30	50	24	5.5	8.5	5	22	23	50
AC2500	1/4~3/8	181	156.5	38	53	60.8	41	64	35	7	11	7	34.2	26	70.5
AC3000	1/4~3/8	181	156.5	38	53	60.8	41	64	35	7	11	7	34.2	26	70.5
AC4000	3/8~1/2	238	191.5	41	70	65.5	50	84	40	9	13	7	42.2	33	88
AC4000-06	3/4	253	193	40.5	70	69.5	50	89	40	9	13	7	46.2	36	88
AC5000	3/4~1	300	271.5	48	90	75.5	69.8	105	50	12	16	10.5	55.2	40	115

A Series Air Treatment Units

Ordering Code FR.L Combination

AC 30 10 - 03 - □

- AC: Filter Regulator+Lubricator
- 30: 10:1000 Body Size; 20:2000 Body Size; 30:3000 Body Size; 40:4000 Body Size; 50:5000 Body Size
- 10: 10: Two Elements (Filter Regulator+Lubricator)
- 03: M5:M5; 01:1/8″; 02:1/4″; 03:3/8″; 04:1/2″; 06:3/4″; 10:1″
- □: Blank: Manual Drain Type; D: Auto Drain Type (Available Only For 2000 or Above)





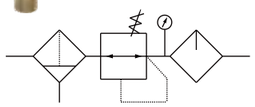

Specifications

Guaranteed pressure resistance	1.5MPa
Max.working pressure	1.0MPa
Working temperature	5~60℃
Filter precision	25 μm(5 μm is optional)
Recommended oil	Turbine No1 Oil ISOVG32
Bowl material	Polycarbonate
Bowl guard	AC1010~2010 (None) AC3010~5010 (Available)
Pressure adjusting range	AC1010: 0.05~0.7MPa AC2010~5010: 0.05~0.85MPa
Valve type	With overflow

Note: NPT, PT Port size is optional

Model	Specifications						Accessories	
	Assembly		Rated flow (L/min)	Port size (G)	Pressure gauge thread size(G)	Weight (Kg)	Bracket (2Pcs)	Pressure Gauge
	Filter Regulator	Lubricator						
AC1010-M5	AW1000	AL1000	90	M5	1/16	0.22	Y10T	G27-10-R1
AC2010-01	AW2000	AL2000	500	G1/8"	1/8	0.66	Y20T	G36-10-01
AC2010-02				G1/4"				
AC3010-02	AW3000	AL3000	1700	G1/4"	1/8	0.98	Y30T	
AC3010-03				G3/8"				
AC4010-03	AW4000	AL4000	3000	G3/8"	1/4	1.93	Y40T	G46-10-02
AC4010-04				G1/2"				
AC4010-06	AW4000-06	AL4000-06	3000	G3/4"	1/4	1.99	Y50T	
AC5010-06	AW5000	AL5000	4000	G3/4"	1/4	3.20	Y60T	
AC5010-10				G1"				

Note: The above information is based on 0.7Mpa(7.1kgf/cm^2) supplied pressure and 0.5Mpa(5.1kgf/cm^2) setted pressure

IS09001 CE
VPC PNEUMATIC®
A Series Air Treatment Units

Main Dimensions

AC1010-2010

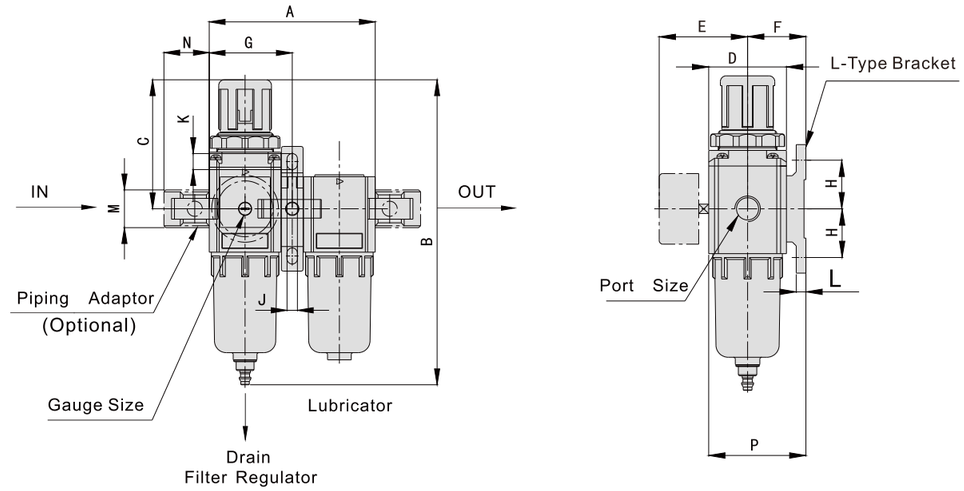

AC3010-5010

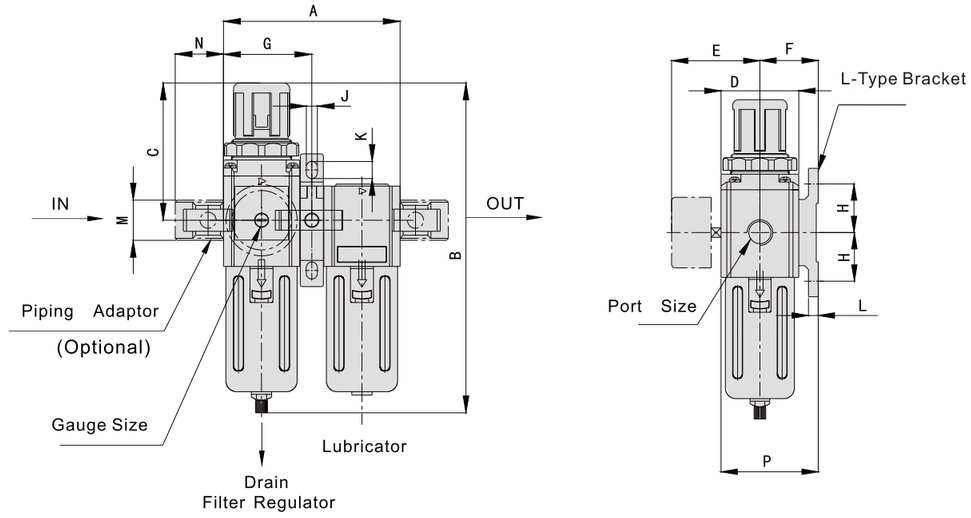

Model	Port Size	A	B	C	D	E	F	G	H	J	K	L	M	N	P
AC1010	M5	58	109.5	50.5	25	26	25	29	20	4.5	7.5	5	17.5	16	38.5
AC2010	1/8~1/4	90	164.5	78	40	56.8	30	45	24	5.5	8.5	5	22	23	50
AC3010	1/4~3/8	117	211	92.5	53	60.8	41	58.5	35	7	11	7	34.2	26	70.5
AC4010	3/8~1/2	154	262	112	70	70.5	50	77	40	9	13	7	42.2	33	88
AC4010-06	3/4	164	267	114	70	70.5	50	82	40	9	13	7	46.2	36	88
AC5010	3/4~1	195	338	116	90	75.5	69.8	97.5	50	12	16	10.5	55.2	40	115

A Series Air Treatment Units

Ordering Code AW Series F.R Combination

AW 30 00 - 03 - □

- AW: F.R Combination
- 30 00: 10:1000 Body Size; 20:2000 Body Size; 30:3000 Body Size; 40:4000 Body Size; 50:5000 Body Size
- 03: M5:M5; 01:1/8″; 02:1/4″; 03:3/8″; 04:1/2″; 06:3/4″; 10:1″
- □: Blank: Manual Drain Type; D: Auto Drain Type (Available Only For 2000 or Above)



Specifications

Guaranteed pressure resistance	1.5MPa
Max.working pressure	1.0MPa
Working temperature	5~60℃
Filter precision	25μm
Bowl material	Polycarbonate
Bowl guard	AW1000~2000(None) AW3000~5000(Available)
Pressure adjusting range	AW1000:0.05~0.7Mpa(0.5~0.7kgf/cm²) AW2000~5000:0.05~0.85Mpa(0.5~8.5kgf/cm²)
Valve type	With overflow

Note: NPT, PT Port size is optional

Model	Specifications				Accessories	Drain function	Auto drain model
	Rated flow (L/min)	Port size (G)	Pressure gauge thread size(G)	Weight (Kg)	Bracket		
AW1000-M5	100	M5	G1/16	0.09	B120	Manual drain	-
AW2000-01	550	G1/8"	G1/8	0.36	B220	Manual drain	AW2000-01D
AW2000-02		G1/4"					AW2000-02D
AW3000-02	2000	G1/4"	G1/8	0.56	B320	A.Zero pressure drain B.Manual drain	AW3000-02D
AW3000-03		G3/8"					AW3000-03D
AW4000-03	4000	G3/8"	G1/4	1. 15	B420		AW4000-03D
AW4000-04		G1/2"					AW4000-04D
AW4000-06	4500	G3/4"	G1/4	1. 21	B420		AW4000-06D
AW5000-06	5500	G3/4"	G1/4	1.70	B420		AW5000-06D
AW5000-10		G1"					AW5000-10D

Note: The above information is based on 0.7Mpa(7.1kgf/cm²) supplied pressure and 0.5Mpa(5.1kgf/cm²) setted pressure

VPC PNEUMATIC®
IS09001 CE

A Series Air Treatment Units

Main Dimensions

AW1000-2000

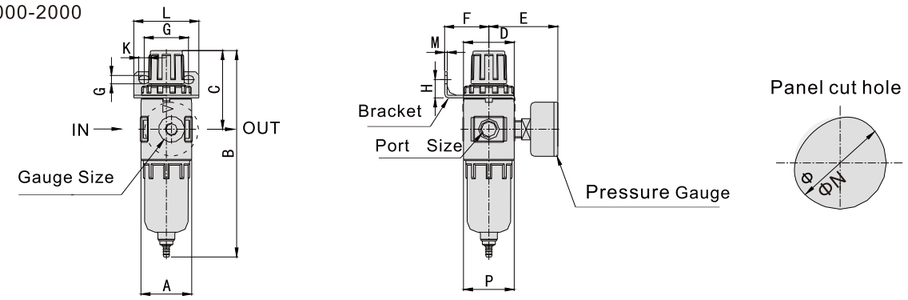

AW3000-4000

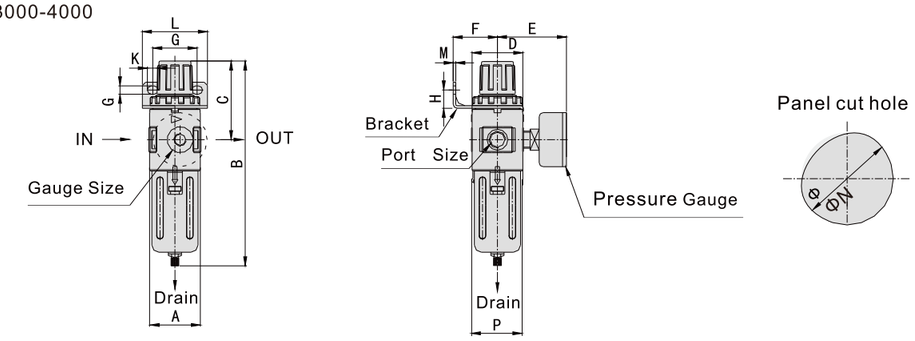

AW5000

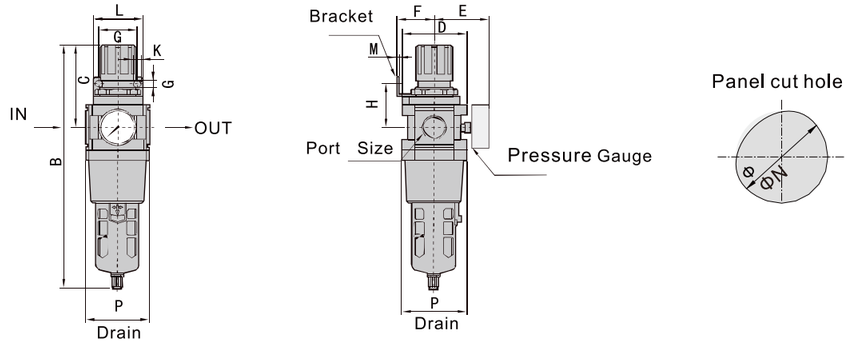

Model	Port Size	A	B	C	D	F	G	H	J	K	L	M	N	P
AW1000-M5	M5	25	109.5	50.5	25	25	28	30	4.5	6.5	40	2	20.5	28
AW2000-01	1/8″	40	164.5	78	40	30	34	43.5	5.4	15.4	55	2.3	33.5	40
AW2000-02	1/4″	40	164.5	78	40	30	34	43.5	5.4	15.4	55	2.3	33.5	40
AW3000-02	1/4″	53	211	92.5	53	39	40	46	6.5	8	53	2.3	42.5	56
AW3000-03	3/8″	53	211	92.5	53	39	40	46	6.5	8	53	2.3	42.5	56
AW4000-03	3/8″	70	262	112	70	49.2	54	53.5	8.5	10.5	70	2.3	52.5	73
AW4000-04	1/2″	75	267	114	70	49.2	54	53.5	8.5	10.5	70	2.3	52.5	73
AW4000-06	3/4″	70	262	112	70	49.2	54	53.5	8.5	10.5	70	2.3	52.5	73
AW5000-06	3/4″	90	338	116	90	49.2	54	62	8.5	10.5	70	2.3	52.5	90
AW5000-10	1″	90	338	116	90	49.2	54	62	8.5	10.5	70	2.3	52.5	90

A Series Air Treatment Units

Ordering Code AF Series Air Filter

AF 30 00 - 03 - □

- 30: 10:1000 Body Size; 20:2000 Body Size; 30:3000 Body Size; 40:4000 Body Size; 50:5000 Body Size
- 03: M5:M5; 01:1/8″; 02:1/4″; 03:3/8″; 04:1/2″; 06:3/4″; 10:1″
- □: Blank: Manual Drain Type; D: Auto Drain Type (Available Only For 2000 or Above)
- AF: Filter





Specifications

Guaranteed pressure resistance	1.5MPa
Max.working pressure	1.0MPa
Working temperature	5~60℃
Filter precision	25μm
Bowl material	Aluminum
Bowl guard	AF1000~2000(None)/AF3000~5000(Available)
Body Material	Aluminum
Pressure adjusting range	0.05~0.85MPa
Water cup	Polycarbonate
Core Material	Brass

Note: NPT, PT Port size is optional

Model	Specifications				Accessories	Drain function	Auto drain model
	Rated flow (L/min)	Port size (G)	Bowl capacity (cm^3)	Weight (Kg)	Bracket		
AF1000-M5	110	M5	4	0.07	–	Manual drain	
AF2000-01	750	G1/8″	15	0.19	B240		AF2000-01D
AF2000-02		G1/4″					AF2000-02D
AF3000-02	1500	G1/4″	20	0.29	B340	A.Zero pressure drain B.Manual drain	AF3000-02D
AF3000-03		G3/8″					AF3000-03D
AF4000-03	4000	G3/8″	45	0. 55	B440		AF4000-03D
AF4000-04		G1/2″					AF4000-04D
AF4000-06	6000	G3/4″	45	0. 58	B540		AF4000-06D
AF5000-06	7000	G3/4″	130	1.08	B640		AF5000-06D
AF5000-10		G1″					AF5000-10D

Note: The above information is based on 0.7Mpa(7.1kgf/cm^2) supplied pressure and 0.5Mpa(5.1kgf/cm^2) setted pressure

IS09001 CE
VPC PNEUMATIC®
A Series Air Treatment Units

Main Dimensions

AF1000-2000

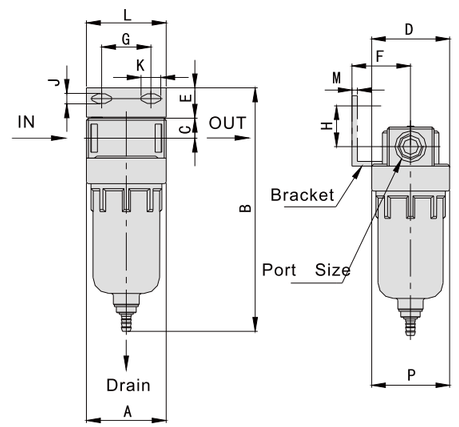

AF3000-4000

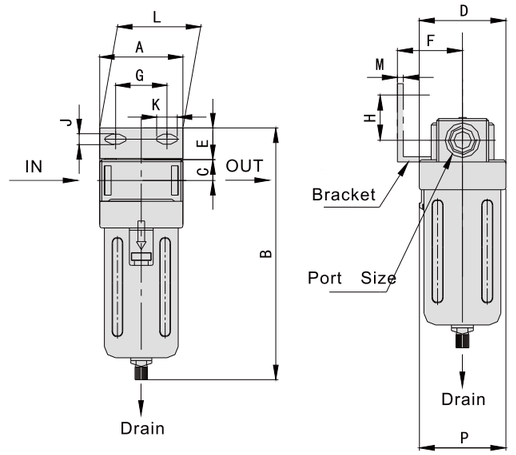

AF5000

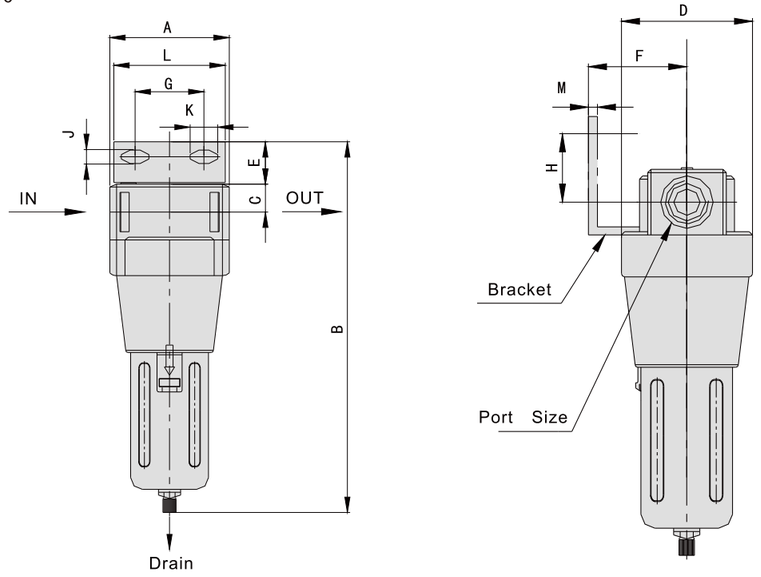

Model	Port Size	A	B	C	D	E	F	G	H	J	K	L	M	P
AF1000	M5	25	66	7	25	-	-	-	-	-	-	-	-	26.5
AF2000	1/8~1/4	40	97.5	11	40	17	30	27	22	5.4	8.4	40	2.3	40
AF3000	1/4~3/8	53	132.5	14	53	16	41	40	23	6.5	8	53	2.3	56
AF4000	3/8~1/2	70	168.5	18	70	17	50	54	26	8.5	10.5	70	2.3	73
AF4000-06	3/4	75	172.5	20	70	14	50	54	25	8.5	10.5	70	2.3	73
AF5000	3/4~1	90	247.5	24	90	23	66.5	66	35	11	13	90	3.2	90

A Series Air Treatment Units

Ordering Code AL Series Lubricator

AL — AL Series Lubricator

30 — 10:1000 Body Size, 20:2000 Body Size, 30:3000 Body Size, 40:4000 Body Size, 50:5000 Body Size

00 – 03 — M5:M5, 01:1/8″, 02:1/4″, 03:3/8″, 04:1/2″, 06:3/4″, 10:1″





Specifications

Guaranteed pressure resistance	1.5MPa
Max.working pressure	1.0MPa
Working temperature	5~60℃
Recommended oil	Turbine No1 Oil ISOVG32
Bowl material	Polycarbonate
Bowl guard	AL1000~2000(None) AL3000~5000(Available)
Valve type	With overflow

Model	Specifications					Accessories
	*Minimal flow of oil drop (L/min)	Rated flow (L/min)	Port size (G)	Bowl capacity (cm^3)	Weight (Kg)	Bracket
AL1000-M5	4	95	M5	7	0.07	–
AL2000-01	15	800	G1/8″	25	0.22	B240
AL2000-02			G1/4″			
AL3000-02	30	1700	G1/4″	50	0.30	B340
AL3000-03	40		G3/8″			
AL4000-03	40	5000	G3/8″	130	0.56	B440
AL4000-04	50		G1/2″			
AL4000-06	50	6300	G3/4″	130	0.58	B540
AL5000-06	190	7000	G3/4″	130	1.08	B640
AL5000-10			G1″			

Note: * The above information is based on 0.51Mpa supplied pressure, the flow of oil drop is 2~3 drop/min. The temperature of Turbine No.1 oil is 20℃
* The above information is based on 0.51Mpa supplied pressure and 0.03Mpa step down.
* NPT, PT port size is optional.

IS09001 CE
VPC PNEUMATIC®
A Series Air Treatment Units

Main Dimensions

AL1000-2000

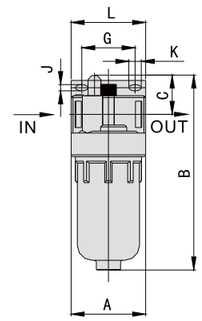

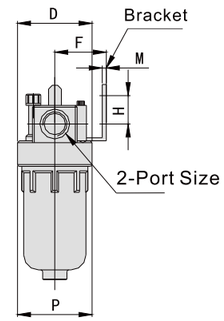

AL3000-4000

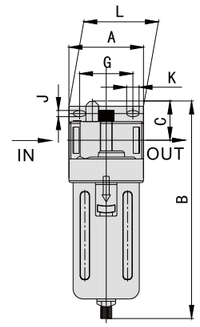

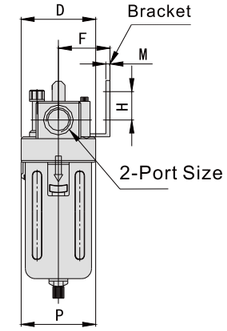

AL5000

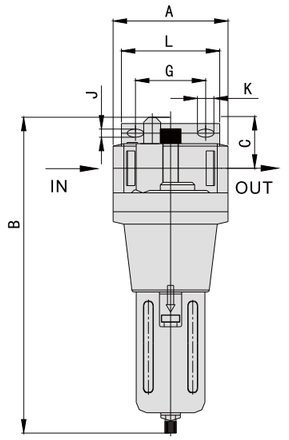

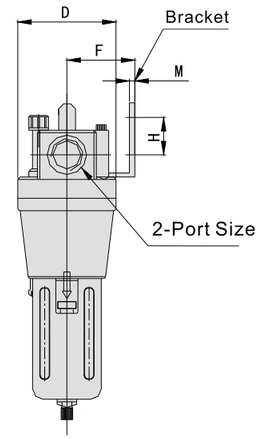

Model	Port Size	A	B	C	D	F	G	H	J	K	L	M	P
AL1000-M5	M5	25	81.5	25.5	25	-	-	-	-	-	-	-	27
AL2000-01	1/8″	40	122	38	40	30	27	22	5.4	8.4	40	2.3	40
AL2000-02	1/4″	40	122	38	40	30	27	22	5.4	8.4	40	2.3	40
AL3000-02	1/4″	53	142	38	53	41	40	23	6.5	8	53	2.3	56
AL3000-03	3/8″	53	142	38	53	41	40	23	6.5	8	53	2.3	56
AL4000-03	3/8″	70	177	41	70	50	54	26	8.5	10.5	70	2.3	73
AL4000-04	1/2″	75	177	39	70	50	54	25	8.5	10.5	70	2.3	73
AL4000-06	3/4″	75	177	39	70	50	54	25	8.5	10.5	70	2.3	73
AL5000-06	3/4″	90	254	45	90	66.5	66	35	11	13	90	3.2	90
AL5000-10	1″	90	254	45	90	66.5	66	35	11	13	90	3.2	90

A Series Air Treatment Units

Ordering Code AR Series Air Regulator

AR 30 00 - 03

- AR: Regulator
- 30: 10:1000 Body Size; 20:2000 Body Size; 30:3000 Body Size; 40:4000 Body Size; 50:5000 Body Size
- 00
- 03: M5:M5; 01:1/8″; 02:1/4″; 03:3/8″; 04:1/2″; 06:3/4″; 10:1″



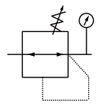

Specifications

Guaranteed pressure resistance	1.5MPa
Max.working pressure	1.0MPa
Working temperature	5~60℃
Pressure adjusting range	0.05~0.85MPa
Valve type	With overflow

Model	Specifications				Accessories
	Rated flow (L/min)	Port size (G)	Pressure gauge thread size(G)	Weight (Kg)	Bracket
AR1000-M5	100	M5"	G1/16"	0. 08	B120
AR2000-01	550	G1/8"	G1/8"	0. 27	B220
AR2000-02		G1/4"			
AR2500-02	2000	G1/4"	G1/8"	0. 27	B220
AR2500-03		G3/8"			
AR3000-02	2500	G1/4"	G1/8"	0. 41	B320
AR3000-03		G3/8"			
AR4000-03	6000	G3/8"	G1/4"	0. 84	B420
AR4000-04		G1/2"			
AR4000-06	6000	G3/4"	G1/4"	0. 94	
AR5000-06	8000	G3/4"	G1/4"	1. 19	
AR5000-10		G1"			

Note:The above information is based on 0.7Mpa(7.1kgf/cm^2)
supplied pressure 0.5Mpa(5.1kgf/cm^2) setted pressure

IS09001 CE
VPC PNEUMATIC®
A Series Air Treatment Units

Main Dimensions

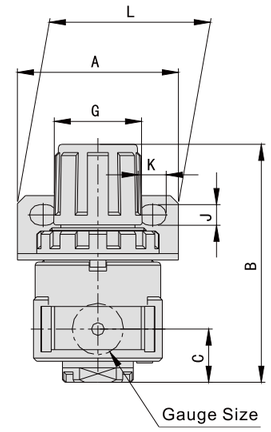

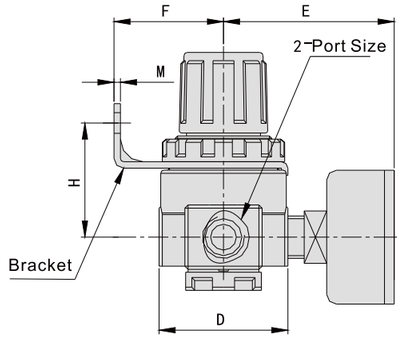

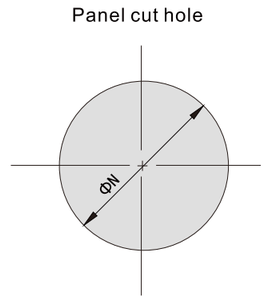

Model	Port Size	A	B	C	D	E	F	G	H	J	K	L	M	N
AR1000-M5	M5	25	61.5	11	25	26	25	28	30	4.5	6.5	40	2	20.5
AR2000-01	1/8″	40	95	17	40	56.8	30	34	44	5.4	15.4	55	2.3	33.5
AR2000-02	1/4″	40	95	17	40	56.8	30	34	44	5.4	15.4	55	2.3	33.5
AR2500-02	1/4″	53	102.5	25	48	60.8	30	34	44	5.4	15.4	55	2.3	33.5
AR2500-03	3/8″	53	102.5	25	48	60.8	30	34	44	5.4	15.4	55	2.3	33.5
AR3000-02	1/4″	53	127.5	35	53	60.8	39	40	46	6.5	8	53	2.3	42.5
AR3000-03	3/8″	53	127.5	35	53	60.8	39	40	46	6.5	8	53	2.3	42.5
AR4000-03	3/8″	75	154	40.5	70	69.5	49.2	54	55.5	8.5	10.5	70	2.3	52.5
AR4000-04	1/2″	70	149.5	37.5	70	65.5	49.2	54	54	8.5	10.5	70	2.3	52.5
AR4000-06	3/4″	75	154	40.5	70	69.5	49.2	54	55.5	8.5	10.5	70	2.3	52.5
AR5000-06	3/4″	90	168	48	90	75.5	49.2	54	62	8.5	10.5	70	2.3	52.5
AR5000-10	1″	90	168	48	90	75.5	49.2	54	62	8.5	10.5	70	2.3	52.5

A Series F.R.L Accessories

T-Type Spacer



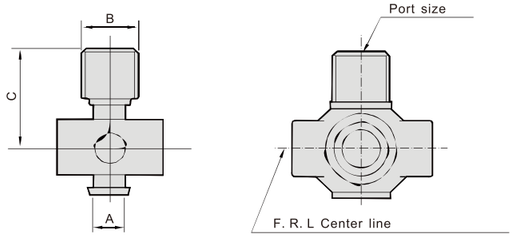

Model	Port Size	A	B	C	Applicable Model
Y21-01	1/8″	10	19	29	AC2000
Y21-02	1/4″				
Y31-01	1/8″	11	19	33	AC3000
Y31-02	1/4″				
Y41-02	1/4″	14	24	39	AC4000
Y41-03	3/8″				
Y61-03	3/8″	15	30	50.5	AC5000
Y61-04	1/2″				

L-Type Bracket/Spacer with L-Type Bracket





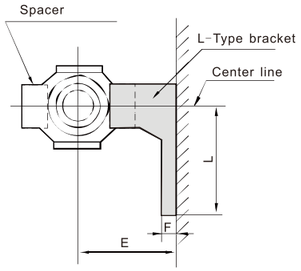

L-Type Bracket	Spacer with L-Type Bracket	A	B	C	D	E	F	G	R	L	Applicable Model
B110L	Y10L	20	12	4.5	3	25	5	8	2.25	27	AC1000
B210L	Y20L	24	15	5.5	3	30	5	10	2.75	33	AC2000
B310L	Y30L	35	16	7	4	41	7	11	3.5	45	AC2500-AC3000
B410L	Y40L	40	22	9	4	50	7	14	4.5	50	AC4000
B510L	Y50L	40	22	9	4	50	7	14	4.5	50	AC4000-06
B610L	Y60L	50	23	12	4	69.8	10.5	15	6	63	AC5000

T-Type Bracket/Spacer with T-Type Bracket





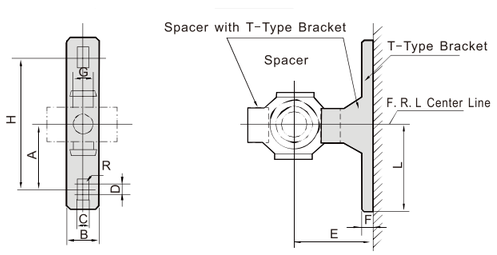

T-Type Bracket	Spacer with T-Type Bracket	A	B	C	D	E	F	G	H	R	L	Applicable Model
B110T	Y10T	20	12	4.5	3	25	5	8	40	2.25	27	AC1010
B210T	Y20T	24	15	5.5	3	30	5	10	48	2.75	33	AC2010
B310T	Y30T	35	16	7	4	41	7	11	70	3.5	45	AC3010
B410T	Y40T	40	22	9	4	50	7	14	80	4.5	50	AC4010
B510T	Y50T	40	22	9	4	50	7	14	80	4.5	50	AC4010-06
B610T	Y60T	50	23	12	4	69.8	10.5	15	100	6	63	AC5010

IS09001 CE
VPC PNEUMATIC®

A Series F.R.L Brackets

Y-Type Spacer

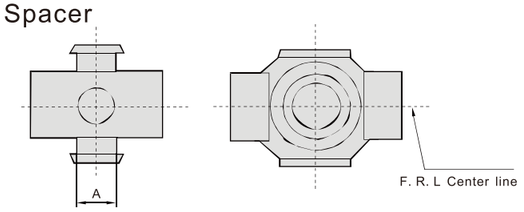

Y-Type Bracket	A	Applicable Model
Y10L	8	AC1000
Y20L	10	AC2000
Y30L	11	AC2500-AC3000
Y40L	14	AC4000
Y50L	14	AC4000-06
Y60L	15	AC5000

20-Type Bracket/40-Type Bracket



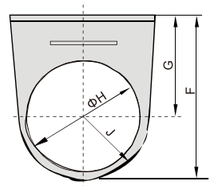

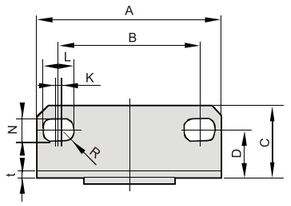

Model	A	B	C	D	F	G	ΦH	J	K	L	N	R	t	Applicable Model
B120	40	28	17	11	37.8	25	20.5	12.3	2	6.5	4.5	2.25	2	AR/AW1000
B220	55	34	25	19	50	30	33.5	20	10	15.4	5.4	2.7	2.3	AR/AW2000、AR2500
B320	53	40	21.5	14	64	39	42.5	25	1.5	8	6.5	3.25	2.3	AR/AW3000
B420	70	54	27	18	79.2	49.2	52.5	30	2	10.5	8.5	4.25	2.3	AR/AW4000~5000

20-Type Bracket/40-Type Bracket



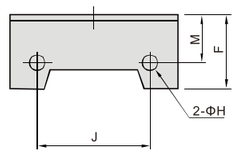

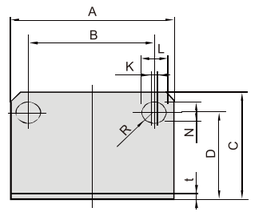

Model	A	B	C	D	F	ΦH	J	K	L	M	N	R	t	Fixing screw	Applicable Model
B240	40	27	33	27	18	4.5	26	3	8.4	14	5.4	2.7	2.3	M4x8	AF/AL2000
B340	53	40	39	32	22.5	4.5	35	1.5	8	19	6.5	3.25	2.3	M4x8	AF/AL3000
B440	70	54	47	38	31.5	5.5	47	2	10.5	20	8.5	4.25	2.3	M5x10	AF/AL4000
B540	70	54	47	38	27.5	5.5	47	2	10.5	20	8.5	4.25	2.3	M5x10	AF/AL4000-06
B640	90	66	64	52	43	6.5	60	2	13	29	11	5.5	3.2	M6x10	AF/AL5000

HAD402 Auto Drain/ZDFS Auto Discharger







Model	HAD402-02	HAD402-03	HAD402-04
Guaranteed pressure resistance	1.5MPa		
Working pressure	0.15-1.0MPa		
Working temperature	5~60℃		
Port size	G1/4	G3/8	G1/2
Drain port size	G1/8		
Drain status	Normal Open		

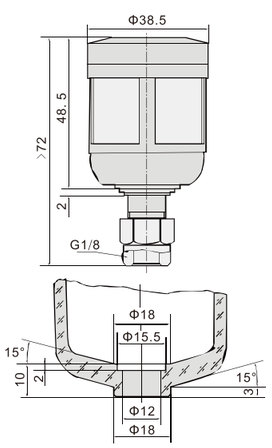

V Series F.R.L With Embedded Air Gauge



Model	Joint Size
VF2-01	G1/8"
VF2-02	G1/4"
VF3-02	G1/4"
VF3-03	G3/8"
VF3-04	G1/2"

Odering Code

VF2 - 01 D □

- VF2:2 Series Filter, VF3:3 Series Filter
- Joint Size: 01:G1/8″ 02:G1/4″ 03:G3/8″ 04:G1/2″
- Drain Type: Blank:Air Shttoff Drain, D:Auto Drain Type
- Blank:No Bracket, J:With Bracket



Model	Joint Size
VR2-01	G1/8"
VR2-02	G1/4"
VR3-02	G1/4"
VR3-03	G3/8"
VR3-04	G1/2"

Odering Code

VR2 - 01 □ P

- VR2:2 Series Regulator, VR3:3 Series Regulator
- Joint Size: 01:G1/8″ 02:G1/4″ 03:G3/8″ 04:G1/2″
- Blank:No Bracket, J:With Bracket
- Gauge Type: P:Square Gauge, J:Standard Gauge



Model	Joint Size
VL2-01	G1/8
VL2-02	G1/4
VL3-02	G1/4
VL3-03	G3/8
VL3-04	G1/2

Odering Code

VI2 - 01

- VR2:2 Series Regulator, VR3:3 Series Regulator
- Joint Size: 01:G1/8″ 02:G1/4″ 03:G3/8″ 04:G1/2″



Model	Joint Size
VFR2-01	G1/8
VFR2-02	G1/4
VFR3-02	G1/4
VFR3-03	G3/8
VFR3-04	G1/2

Odering Code

VFR2 - 01 □ □ P

- VR2:2 Series Regulator, VR3:3 Series Regulator
- Joint Size: 01:G1/8″ 02:G1/4″ 03:G3/8″ 04:G1/2″
- Drain Type: Blank:Air Shutoff Drain, D:Auto Drain Type
- Blank:No Bracket, D:With Bracket
- Gauge Type: P:Square Gauge, N:Standard Gauge



Model	Joint Size
VFC2-01	G1/8
VFC2-02	G1/4
VFC3-02	G1/4
VFC3-03	G3/8
VFC3-04	G1/2

Odering Code

VFC2 - 01 □ P

- VFC2:2 Series F.R.L, VFC3:3 Series F.R.L
- Joint Size: 01:G1/8″ 02:G1/4″ 03:G3/8″ 04:G1/2″
- Drain Type: Blank:Air Shutoff Drain, D:Auto Drain Type
- Gauge Type: P:Square Gauge, N:Standard Gauge



Model	Joint Size
VC2-01	G1/8
VC2-02	G1/4
VC3-02	G1/4
VC3-03	G3/8
VC3-04	G1/2

Odering Code

VC2 - 01 □ P

- VC2:2 Series F.R.L, VC3:3 Series F.R.L
- Joint Size: 01:G1/8″ 02:G1/4″ 03:G3/8″ 04:G1/2″
- Drain Type: Blank:Air Shutoff Drain, D:Auto Drain Type
- Gauge Type: P:Square Gauge, N:Standard Gauge

A/B Series Air Treatment Unit



AF Series

Model	Auto Drain	Joint Size
AF1500	AF1500D	G1/8
AF2000	AF2000D	G1/4



BF Series

Model	Auto Drain	Joint Size
BF2000	BF2000D	G1/4
BF3000	BF3000D	G3/8
BF4000	BF4000D	G1/2



AL Series

Model	Joint Size
AL1500	G1/8
AL2000	G1/4



BL Series

Model	Joint Size
BL2000	G1/4
BL3000	G3/8
BL4000	G1/2



AFR Series

Model	Auto Drain	Joint Size
AFR1500	AFR1500D	G1/8
AFR2000	AFR2000D	G1/4



BFR Series

Model	Auto Drain	Joint Size
BFR2000	BFR2000D	G1/4
BFR3000	BFR3000D	G3/8
BFR4000	BFR4000D	G1/2



AFC Series

Model	Auto Drain	Joint Size
AFC1500	AFC1500D	G1/8
AFC2000	AFC2000D	G1/4



BFC Series

Model	Auto Drain	Joint Size
BFC2000	BFC2000D	G1/4
BFC3000	BFC3000D	G3/8
BFC4000	BFC4000D	G1/2



AC Series

Model	Auto Drain	Joint Size
AC1500	AC1500D	G1/8
AC2000	AC2000D	G1/4



BC Series

Model	Auto Drain	Joint Size
BC2000	BC2000D	G1/4
BC3000	BC3000D	G3/8
BC4000	BC4000D	G1/2



AR Series

Model	Joint Size
AR1500	G1/8
AR2000	G1/4



BR Series

Model	Joint Size
BR2000	G1/4
BR3000	G3/8
BR4000	G1/2